M71S AC05

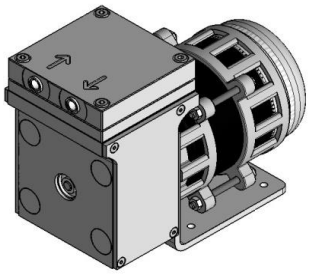

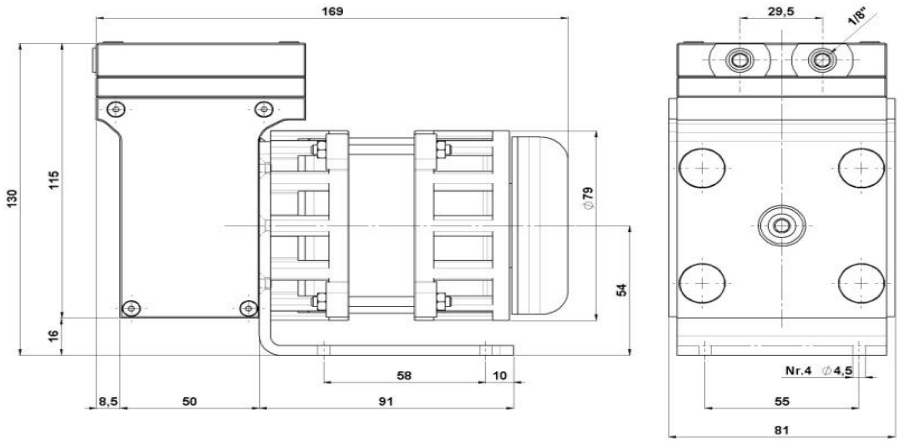

Part number	MO1A05C1	MO1A05A2
Pneumatic Data		
Nominal capacity [l/min]	30	36
Max pressure [bar]	0,7	
Max vacuum [mbar ass]	100	
Electrical Data		
Voltage [V]	230 [50 Hz]	110 [60 Hz]
Rated power [W]	95	110
Protection class	IP20	
Wetted parts		
Body pump	Alluminio HardPlate	
Gasket	Viton, EPDM [I], NBR [G]	
Diaphragm	Viton, EPDM [I], NBR [G]	
General Data		
Weight [kg]	2,13	
Ambient temperature [°C]	10-50 °C; (15-50 °C - Viton)	

Flow Curves

The informations in this datasheet are based on technical data and test results. It is the responsability of the user to determinate the suitability of the product for intended use.

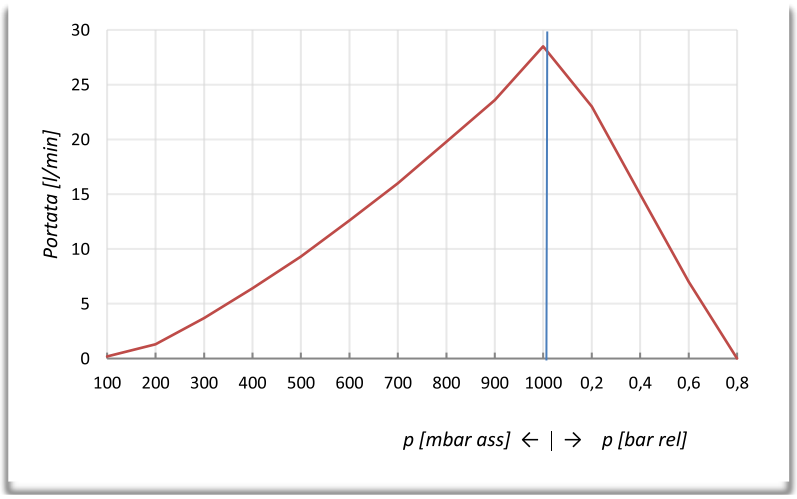

M71S DC54

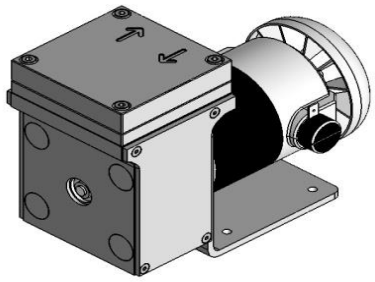

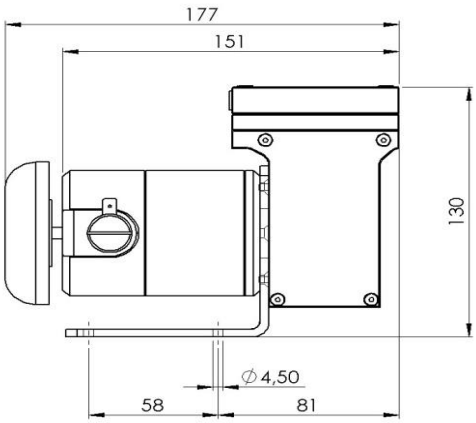

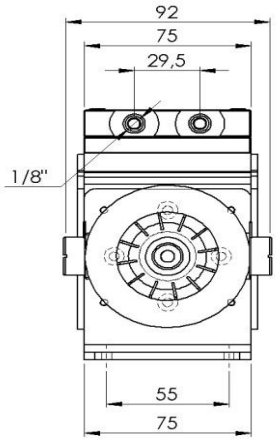

Part number	MO1C54D	MO1C54E
Pneumatic Data		
Nominal capacity [l/min]	33	33
Max pressure [bar]	0,7	
Max vacuum [mbar ass]	100	
Electrical Data		
Voltage [V]	12	24
Rated power [W]	30	30
Protection class	IP40	
Wetted parts		
Body pump	Alluminio HardPlate	
Gasket	Viton, EPDM [I], NBR [G]	
Diaphragm	Viton, EPDM [I], NBR [G]	
General Data		
Weight [kg]	1,9	
Ambient temperature [°C]	10-50 °C	

Flow Curves

The informations in this datasheet are based on technical data and test results. It is the responsability of the user to determinate the suitability of the product for intended use.

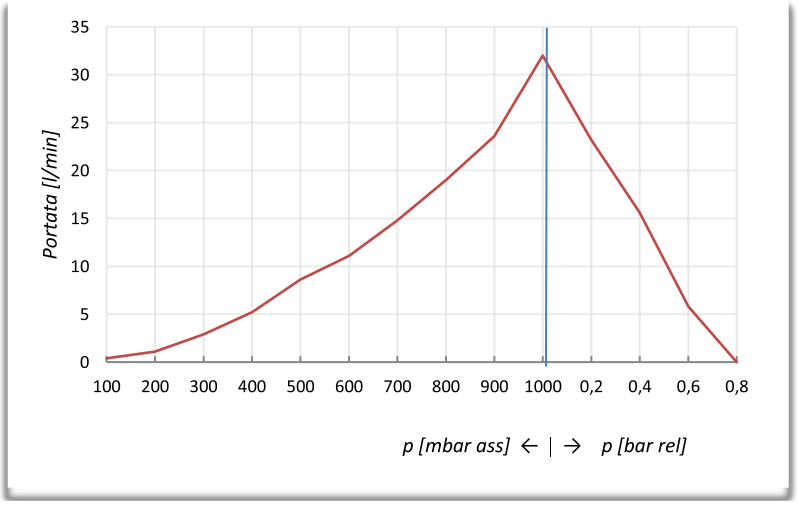

M71SMEC50

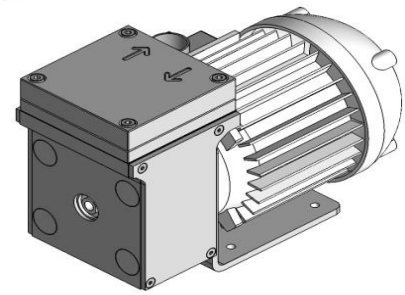

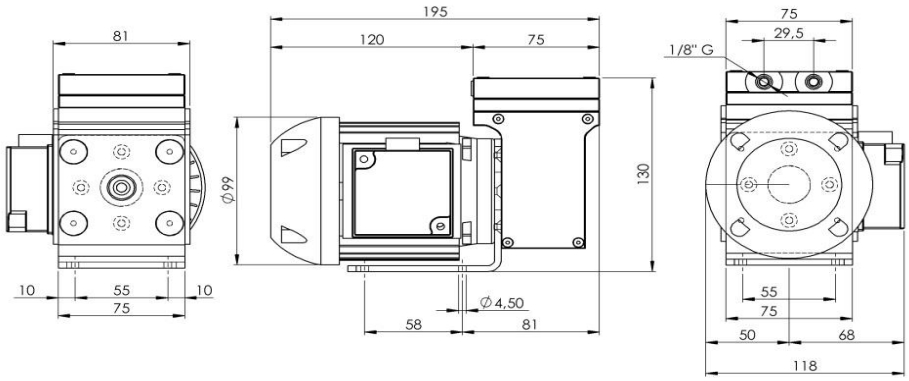

Part number	MO1A07C1	MO1A07A2
Pneumatic Data		
Nominal capacity [l/min]	30	36
Max pressure [bar]	0,7	
Max vacuum [mbar ass]	100	
Electrical Data		
Voltage [V]	230 [50 Hz]	110 [60 Hz]
Rated power [W]	95	110
Protection class	IP44	
Wetted parts		
Body pump	Alluminio HardPlate	
Gasket	Viton, EPDM [I], NBR [G]	
Diaphragm	Viton, EPDM [I], NBR [G]	
General Data		
Weight [kg]	2,54	
Ambient temperature [°C]	10-50 °C; (15-50 °C - Viton)	

Flow Curves

The informations in this datasheet are based on technical data and test results. It is the responsability of the user to determinate the suitability of the product for intended use.

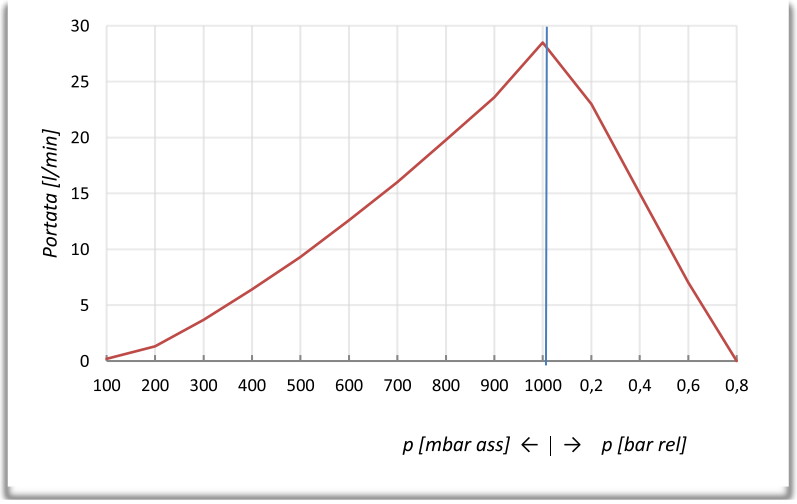

M71BX AC MEC56

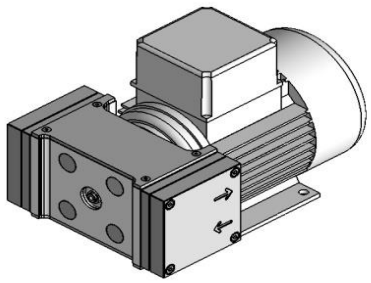

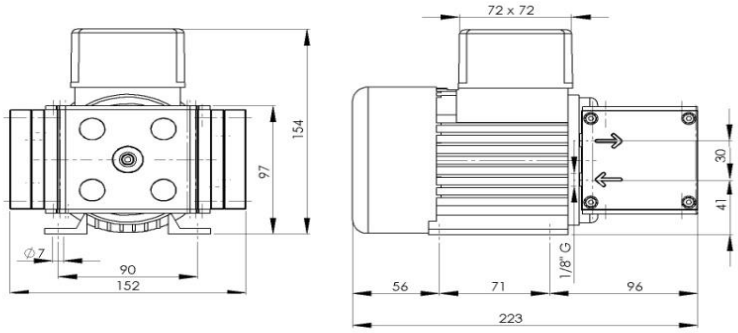

Part number	MO3A09C1	MO3T09G1

Pneumatic Data		
Nominal capacity [l/min]		
Series	30	
Parallel	60	
Max pressure [bar]		
Series	2,0	
Parallel	1,0	
Max vacuum [mbar ass]		
Series	15	
Parallel	100	
Maximum vacuum restart [mbar ass]	100	

Electrical Data		
Phases	1	3
Voltage [V]	230 - 50 Hz (230 - 60 Hz)	230/400 - 50 Hz (275/480 - 60 Hz)
Rated power [W]	140	
Current [A]	1,2 (0,95)	0,50 (0,50)
Protection / insulation class	IP54 / F	

Wetted parts	
Body pump	Alluminio HardPlate
Gasket	Viton, EPDM [I], NBR [G]
Diaphragm	Viton, EPDM [I], NBR [G]

General Data		
Weight [kg]	4,3	4,4
Ambient temperature [°C]	5-50 °C	

Flow Curves

The informations in this datasheet are based on technical data and test results. It is the responsability of the user to determinate the suitability of the product for intended use.

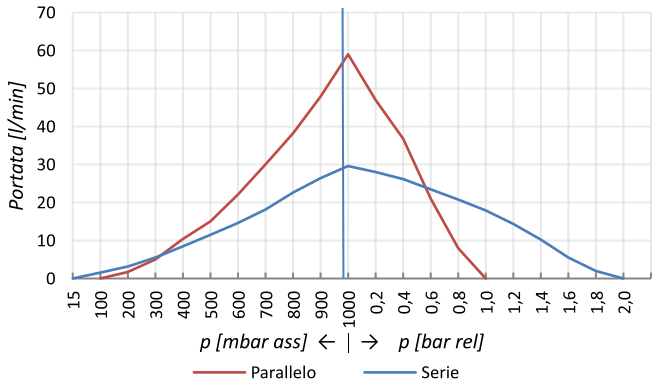

M71BX AC 08

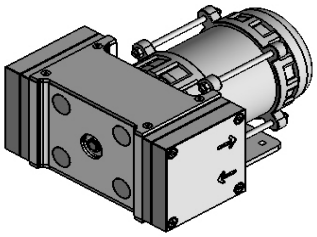

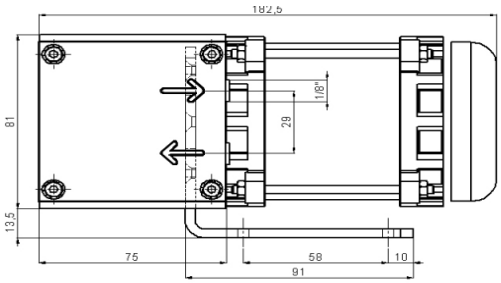

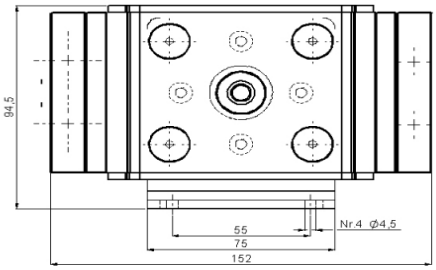

Part number	MO3A08C1	MO3A08A2	MO3T08G1
Pneumatic Data			
Nominal capacity [l/min]			
Series	30	36	30
Parallel	60	68	60
Max pressure [bar]			
Series		1,8	
Parallel		0,8	
Max vacuum [mbar ass]			
Series		15	
Parallel		100	
Electrical Data			
Phases	1	1	3
Voltage [V]	230	110 (60Hz)	230-400
Rated power [W]	140	160	140
Protection class		IP20	
Wetted parts			
Body pump		Alluminio HardPlate	
Gasket		Viton, EPDM [I], NBR [G]	
Diaphragm		Viton, EPDM [I], NBR [G]	
General Data			
Weight [kg]	3,2	3,1	3,1
Ambient temperature [°C]		10-50 °C; (15-50 °C - Viton)	

Flow Curves

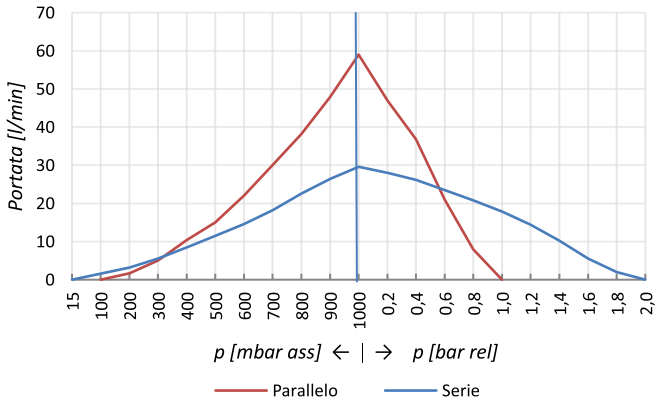

The informations in this datasheet are based on technical data and test results. It is the responsability of the user to determinate the suitability of the product for intended use.

M71BX DC55

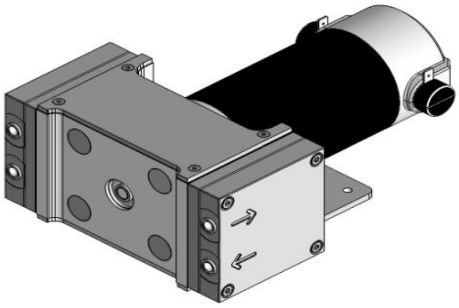

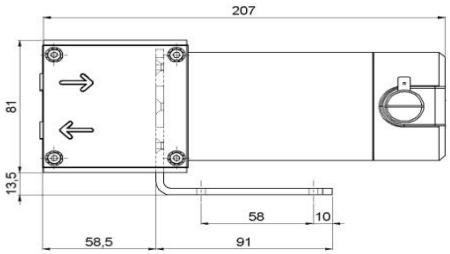

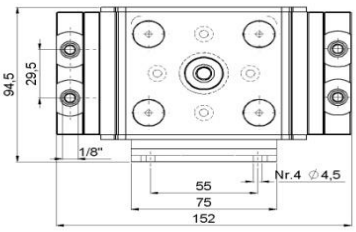

Part number	MO3C55D	MO3C55E
Pneumatic Data		
Nominal capacity [l/min]		
Series	33	33
Parallel	62	62
Max pressure [bar]		
Series	1,8	
Parallel	0,8	
Max vacuum [mbar ass]		
Series	15	
Parallel	100	
Electrical Data		
Voltage [V]	12	24
Rated power [W]	60	
Protection class	IP40	
Wetted parts		
Body pump	Alluminio HardPlate	
Gasket	Viton, EPDM [I], NBR [G]	
Diaphragm	Viton, EPDM [I], NBR [G]	
General Data		
Weight [kg]	2,7	
Ambient temperature [°C]	10-50 °C	

Flow Curves

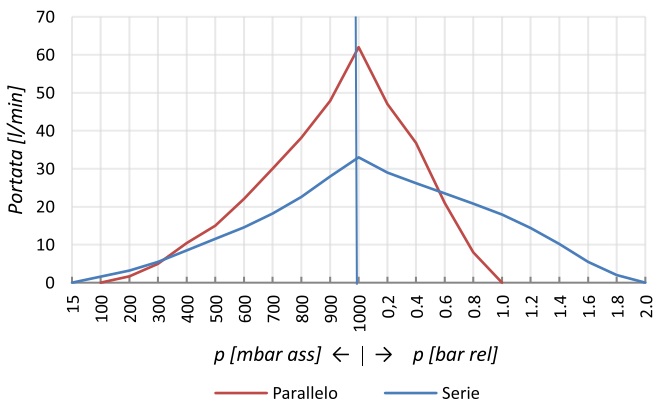

The informations in this datasheet are based on technical data and test results. It is the responsability of the user to determinate the suitability of the product for intended use.